Technical Data
Data Sheet N2955, Draft

SAS2R7M120BM3A
Half-Bridge Module with SiC MOSFET and SiC SBD



BM

Technical Features

- Ultra-Low Loss
- Zero Reverse Recovery
- Standard 62mm Package
- High Frequency Operation
- High Performance AMB Ceramic
- SiC MOSFET with Antiparallel SBD
- Terminals finish: Ni
- Base isolation: AlN

Applications

- Charging Stations
- HF Resonant
- Solar and Wind
- Renewable Energy
- Converters/Inverters

Circuit Diagram

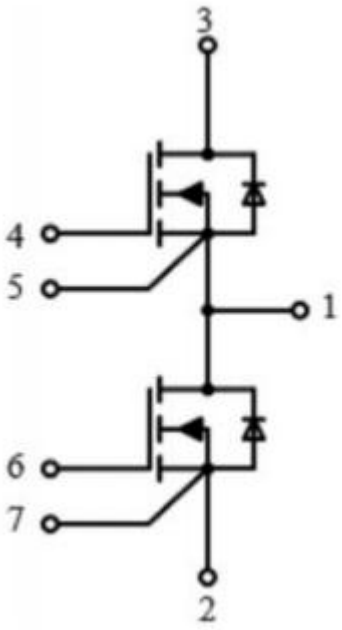

Maximum Ratings@Tj = 25 ˚C, unless otherwise specified

Symbol	Parameter	Value	Value	Unit
V_{DSmax}	Drain-Source Voltage		1.2	kV
V_{GSmax}	Gate-Source Voltage	Absolute Maximum Values	-6/+23	V
V_{GSop}	Gate-Source Voltage	Recommended Operational Values	-4/+18	V
I_D	Continuous Drain Current	V_{GS}=18V, T_C=25˚C, T_J≤175℃	500	A
		V_{GS}=18V, T_C=100˚C, T_J≤175℃	300	
$I_{SD(SD)}$	DC Source-Drain Current (Schottky Diode)	V_{GS}=-4V, T_C=100˚C, T_J≤175℃	350	A
$I_{D(pulse)}$	Pulsed Drain Current	Pulse Width tp Limited by TJmax	600	A
P_D	Power Dissipation	T_C=25˚C, T_J≤150℃	2400	W
T_{Jmax}	Maximum Junction Temperature		175	˚C
$T_{J,opt}$	Recommended operating junction temperature		-40 to +175	˚C
T_C, T_{STG}	Case & Storage Temperature Range		-40 to +125	˚C
Visol	Case Isolation Voltage	AC, 50 Hz, 1min	4.0	kV

Electrical Characteristics (T_C=25°C unless otherwise specified)

Symbol	Parameter	Test Conditions	Min.	Typ.	Max.	Unit
V_{DSS}	Drain Source Blocking Voltage	V_{GS}=0V, I_D=120mA	1.2			kV
$V_{GS(th)}$	Gate Threshold Voltage	V_{DS}=V_{GS}, I_D=180mA	2	2.5	4	V
I_{DSS}	Zero Gate Voltage Drain Current	V_{DS}=1.2kV, V_{GS}=0V		4	320	μA
		V_{DS}=1.2kV, V_{GS}=0V, T_J=175°C		40		
I_{GSS}	Gate-Source Leakage Current	V_{GS}=18V, V_{DS}=0V			400	nA
$R_{DS(on)}$	On State Resistance	V_{GS}=18V, I_{DS}=300A, TJ=25°C		2.75	3.45	mΩ
		V_{GS}=18V, I_{DS}=300A, TJ=175°C		4.2		
gfs	Transconductance	V_{DS}=18V, I_{DS}=300A		160		S
		V_{DS}=18V, I_{DS}=300A, T_J=175°C		-		
Q_{GS}	Gate-Source Charge	V_{DS}=18V, I_{DS}=300A, T_J=175°C		480		nC
Q_{GD}	Gate-Drain Charge			246		
Q_G	Total Gate Charge			1050		
C_{iss}	Input Capacitance	V_{DD}=800V, V_{GS}=-2V/+18V, I_D=300A, Per JEDEC 24 pg 27		21114		pF
C_{oss}	Output Capacitance			906		
C_{rss}	Reverse Transfer Capacitance			114		
$R_{G(int)}$	Internal Gate Resistance	V_{GS}=0V, V_{DS}=800V, f=100kHz, V_{AC}=25mV		4.8		Ω
E_{on}	Turn-On Energy T_J=25℃ T_J=125℃ T_J=150℃ T_J=175℃	V_{DD}=600V, V_{GS}=-2V/+18V I_D=300A, $R_{G(off)}$=0Ω, $R_{G(on)}$=1.3Ω Load=30μH		 4.97 4.55 4.48 4.44		mJ
E_{off}	Turn-Off Energy T_J=25℃ T_J=125℃ T_J=150℃ T_J=175℃			 1.95 1.92 1.97 1.97		mJ
$t_{d(on)}$	Turn-on delay time T_J=25℃ T_J=125℃ T_J=150℃ T_J=175℃			 86 81 81 79		ns
t_r	Rise Time T_J=25℃ T_J=125℃ T_J=150℃ T_J=175℃			 32 28 27 27		
$t_{d(off)}$	Turn-off delay time T_J=25℃ T_J=125℃ T_J=150℃ T_J=175℃			 177 194 196 200		

Electrical Characteristics (T_C=25°C unless otherwise specified)

Symbol	Parameter	Test Conditions	Min.	Typ.	Max.	Unit
t_f	Fall Time T_J=25℃ T_J=125℃ T_J=150℃ T_J=175℃	V_{DD}=600V, V_{GS}=-2V/+18V I_D=300A, $R_{G(off)}$=0Ω, $R_{G(on)}$=1.3Ω Load=30μH		25 25 26 26		ns

Thermal Characteristics

Symbol	Parameter	Test Conditions	Min.	Typ.	Max.	Unit
$R_{thJC\ MOS}$	Juction-to-Case Thermal Resistance for MOSFET	Per SiC MOSFET	-	-	0.065	K/W
$R_{thJC\ SBD}$	Juction-to-Case Thermal Resistance for SBD	Per Antiparallel SiC Schottky Diode		-		K/W

Diode Characteristics(T_C=25°C unless otherwise specified)

Symbol	Parameter	Test Conditions	Min.	Typ.	Max.	Unit
V_{SD}	Diode Forward Voltage	I_F=300A, T_J=25°C, V_{GS}=-4V		1.58		V
		I_F=300A, T_J=175°C, V_{GS}=-4V		2.00		
t_{rr}	Reverse Recovery Time T_J=25℃ T_J=125℃ T_J=150℃ T_J=175℃	V_{DD}=600V, V_{GS}=-2V/+18V I_D=300A, $RG_{(off)}$=0Ω, $R_{G(on)}$=1.3Ω Load=30μH		24 24 24 24		ns
Q_{RR}	Reverse Recovery Charge T_J=25℃ T_J=125℃ T_J=150℃ T_J=175℃			2.04 2.25 2.31 2.25		μC
I_{RRM}	Peak Reverse Recovery Current T_J=25℃ T_J=125℃ T_J=150℃ T_J=175℃			141 153 155 161		A
E_{RR}	Reverse Recovery Energy T_J=25℃ T_J=125℃ T_J=150℃ T_J=175℃	V_{DD}=600V, V_{GS}=-2V/+18V I_D=300A, $R_{G(off)}$=0Ω, $R_{G(on)}$=1.3Ω Load=30μH		0.59 0.65 0.66 0.64		mJ

Technical Data
Data Sheet N2955, Draft

RoHS

Module Physical Characteristics

Symbol	Parameter	Test Conditions	Typ.	Unit
	Material of Module Baseplate		Cu	
	Internal Isolation		AlN AMB	
V_{isol}	Isolation Test Voltage	AC, f=50Hz, t=1min	4	kV
L_{Stray}	Stray Inductance	Measured Between Terminals Input and Output	13	nH
R_{3-1}	Lead Resistance, High-Side	T_C=25˚C, I_D=300A, Terminal-Die	1.20	mΩ
		T_C=125˚C, I_D=300A, Terminal-Die	0.80	mΩ
R_{1-2}	Lead Resistance, Low-Side	T_C=25˚C, I_D=300A, Terminal-Die	1.25	mΩ
		T_C=125˚C, I_D=300A, Terminal-Die	1.20	mΩ
T_{stg}	Storage Temperature		-40 to 125	˚C
d_a	Clearance	Terminal to Terminal	11.0	mm
		Terminal to Heatsink	23.0	mm
d_s	Creepage	Terminal to Terminal	23.0	mm
		Terminal to Heatsink	29.0	mm
M_S	Mounting Torque of Screws	Baseplate To Heatsink, Screw M6	3.0~6.0	N・m
M_T	Mounting Torque of Screws	To Terminals, Screw M6	2.5~5.0	N・m
G	Weight		340	g
C_{TI}	Comparative Tracking Index		>400	

NTC Thermistor Characterization

Symbol	Parameter	Test Conditions	Min.	Typ.	Max.	Unit
R_{NTC}	Related Resistance	T_{NTC}=25˚C		5.0		kΩ
ΔR/R	Resistance Tolerance at 25℃		-3		+3	%
β 25/50	Beta Value (T2=50℃)	B=[ln(R1)-ln(R2)]/[1/T1-1/T2]		3375		K
β 25/80	Beta Value (T2=80℃)	B=[ln(R1)-ln(R2)]/[1/T1-1/T2]		3411		K
β 25/100	Beta Value (T2=100℃)	B=[ln(R1)-ln(R2)]/[1/T1-1/T2]		3433		K
P_{max}	Power Dissipation	T_{NTC}=25±0.5˚C		20	60	mW

Technical Data
Data Sheet N2955, Draft

Ordering Information

Device	Package	Shipping
SAS2R7M120BM3A	BM	TBD

Marking Diagram



Where XXXXX is YYWWL

SAS2R7M120BM3A	= Part Name
SSG	= SSG
YY	= Year
WW	= Week
L	= Lot Number

Technical Data
Data Sheet N2955, Draft

Mechanical Dimensions BM

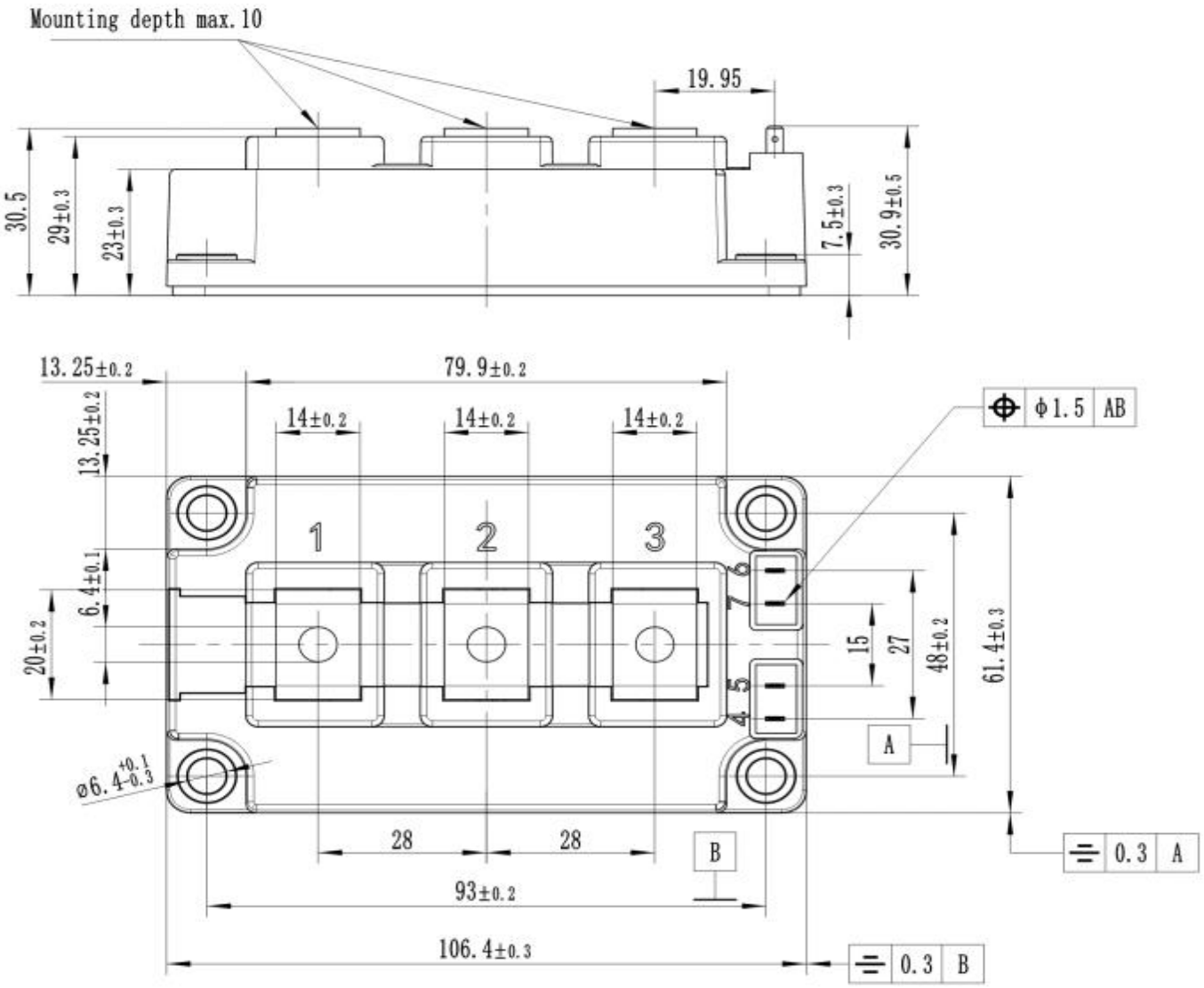

Technical Data
Data Sheet N2955, Draft

DISCLAIMER:
1- The information given herein, including the specifications and dimensions, is subject to change without prior notice to improve product characteristics. Before ordering, purchasers are advised to contact the SMC Diode Solutions sales department for the latest version of the datasheet(s).
2- In cases where extremely high reliability is required (such as use in nuclear power control, aerospace and aviation, traffic equipment, medical equipment , and safety equipment) , safety should be ensured by using semiconductor devices that feature assured safety or by means of users' fail-safe precautions or other arrangement .
3- In no event shall SMC Diode Solutions be liable for any damages that may result from an accident or any other cause during operation of the user's units according to the datasheet(s). SMC Diode Solution assumes no responsibility for any intellectual property claims or any other problems that may result from applications of information, products or circuits described in the datasheets.
4- In no event shall SMC Diode Solutions be liable for any failure in a semiconductor device or any secondary damage resulting from use at a value exceeding the absolute maximum rating.
5- No license is granted by the datasheet(s) under any patents or other rights of any third party or SMC Diode Solutions.
6- The datasheet(s) may not be reproduced or duplicated, in any form, in whole or part, without the expressed written permission of SMC Diode Solutions.
7- The products (technologies) described in the datasheet(s) are not to be provided to any party whose purpose in their application will hinder maintenance of international peace and safety nor are they to be applied to that purpose by their direct purchasers or any third party. When exporting these products (technologies), the necessary procedures are to be taken in accordance with related laws and regulations.